SHAKEE 250

MODEL 250 TREE SHAKER

PTO • 5.5 hp Gas • 1 hp Electric • Wheel Kit (opt.)

OPERATORS MANUAL

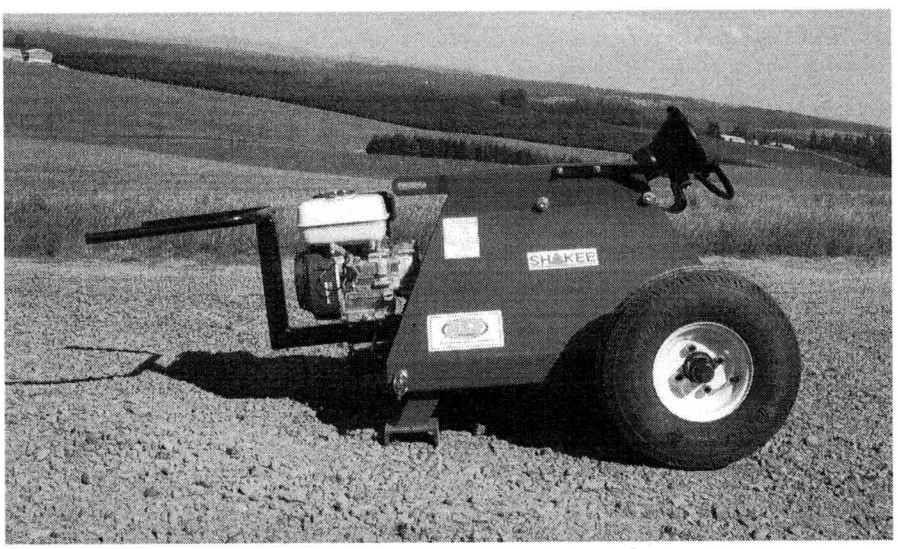

*Gas model with optional wheel kit shown

RES Equipment / Evergreen Christmas Tree Equipment / Shakee
PO Box 710 • Mt Angel, OR 97362 • 503.634.2242 • www.resequipment.com

TO THE OWNER

Follow the pre-operation checklists and instructions before use.

Read this manual before using your Shakee 250. The information presented will prepare you to do a better, safer job. Keep this manual handy for ready reference.

The Shaker you have purchased has been carefully engineered and manufactured to provide dependable and satisfactory use. Like all mechanical products, it will require cleaning and upkeep. Observe all safety information in this manual and safety decals on the Shaker.

Use only genuine Shakee service parts. Substitute parts will void the warranty and may not meet standards require for safe and satisfactory operation.

Throughout this manual, the term IMPORTANT is used to indicate that failure to observe can cause damage to equipment. The terms CAUTION, WARNING, and DANGER are used in conjunction with the Safety-Alert symbol (a triangle with an exclamation mark) to indicate the degree of hazard for items of personal safety.

A Safety-Alert Symbol means ATTENTION! BECOME ALERT! YOUR SAFETY IS INVOLVED!

⚠ **CAUTION:**

Denotes a general reminder for good safety practices or to direct attention to unsafe practices.

⚠ **WARNING:**

Denotes a specific potential hazard.

⚠ **DANGER:**

Denotes the most serious specific potential hazard.

MACHINE REVISIONS		
Serial Number	Date	Description
1000-1999	05/1992	First Production Units
2000 + Up	05/1993	Relocate Foot Switch to Cone End
	05/1993	Add Lip to Cone for Cone Rubber Slinger

TABLE OF CONTENTS

INTRODUCTION ..... Inside Front Cover

SPECIFICATION 2

CHECKLISTS 3

GENERAL INFORMATION 3

SAFETY INFORMATION ..... 4 - 5

SAFETY DECALS ..... 6 - 7

ASSEMBLY INSTRUCTIONS ..... 8 - 11
- a. Gasoline Model 8
- b. PTO Model 8
- c. Electric Model 9
- d. Conversion of PTO to Electric 10
- e. Hydraulic Model 10

GENERAL 11

OPERATING INSTRUCTIONS ..... 12 - 13

SERVICE INSTRUCTIONS ..... 13 - 14

MAINTENANCE AND STORAGE ..... 14 - 15

TROUBLE SHOOTING ..... 16 - 17

INDEX TO PARTS ..... 18 - 25
- a. Parts List for Gasoline Engine Shaker Mount 18
- b. Parts List for Electric and PTO Shaker 20
- c. Parts List for Hydraulic Shaker 22
- d. Parts List for PTO Drive Shaft 25

TORQUE CHART 26

WHEEL KIT (OPTIONAL) ..... 27 - 29

TREE HOLDER (OPTIONAL) ..... 30 - 31

ENGINE MANUALS ..... Follows page 31

WARRANTY ..... Inside Back Cover

Serial Number	Date	Description
2300 & Up	3/93	Introduce Briggs & Stratton Engine. Also electric model foot switch moved to front panel.
?? & Up	9/96	Introduce Honda 5.5 hp Engine Option

SPECIFICATIONS

GASOLINE MODEL	-240 pounds approximate weight
	-5 hp Honda 4-cycle Engine
	-3 3/4 Briggs & Stratton easy start engine (4 cycle)
	-3 1/2 to 4 Tecumseh easy start engine (4 cycle) (Used prior to 1993)
	-710 - 850 RPM shaker speed
	-2100 RPM Engine speed
	-7" diameter cone standard
PTO MODEL	-230 pounds approximate weight
	-Category I, 3 point hitch mounted
	-6R Universal PTO drive
	-540 - 850 RPM recommended PTO speed
	-7" diameter cone standard
ELECTRIC MODEL	-230 pounds approximate weight
	-1 HP TEFC motor, heavy ball bearings, 110 V single phase, 15 amp./min.
	-1750 RPM motor, 5/8" diameter shaft
	-865 RPM operating speed
	-7" diameter cone standard
"ALL 3 MODELS" APPROXIMATE SIZE	-Length 33.5" -Length on Honda 36"
	-Width 27" -Width on Honda 28"
	-Height 26" -Height on Honda 27"
HYDRAULIC MODEL	-55 pounds approximate weight
	-SAE A-flange 5/8" shaft, 40 series motor, or
	-SAE B-flange 7/8" shaft, 50 series motor
	(motors supplied by customer)
SIZE	-Length without hydraulic motor 14"
	-Width 5" plus cone
	-Height 7" plus cone
	-7" diameter cone standard

CHECK LISTS

PRE-DELIVERY CHECK LIST

Inspect the shaker thoroughly after assembly to be certain that it is set up properly. The following checklist is a reminder of points to inspect. Check off each item as it is found satisfactory or after proper adjustment is made.

- Check all bolts to make sure that they are tight. NOTE: See assembly instructions. The 3/4" cross bolts must be tightened to 300 foot pounds minimum.
- Check that all cotter pins are properly installed.
- On PTO model check that PTO shaft is properly installed 8 secured to tractor PTO.
- On Electric and Gasoline models be sure the electric motor or engine, pulleys, and belt are all properly installed, aligned and tightened properly.
- On Electric model be sure only a heavy duty, grounded, 3 prong extension cord is used on 110 volt single phase.
- On Hydraulic models, be sure hydraulic fittings are tight and hoses, including a motor case drain, are properly attached.
- On Hydraulic models, be sure motor is secured to housing properly and flex coupling is properly attached and aligned.
- On Gasoline engine model be sure it is snug and engine has oil and fuel.

DAILY CHECK LIST

- On electric and gasoline models, check belt for wear and that pulleys are not loose.
- Occasionally check the lower lift arm hitch pins and nuts. These should be torqued to 300 foot pounds.
- On Hydraulic models, check to insure motor mounting bolts are tight and flexible coupling set screws are tight.
- On gasoline engine model check oil and be sure no needles or debris are getting into cooling air passages.

GENERAL INFORMATION

The purpose of this manual is to assist the operator in maintaining and operating the Shakee Christmas Tree Shaker. Read it carefully. It furnishes information and instructions that will help you achieve years of dependable performance. These operating and maintenance instructions have been compiled from extensive field experience and engineering data. However, through experience and these instructions you should be able to develop operating procedures suitable to your particular situation.

The illustrations and data used in this manual were current at the time of printing. But due to possible in-line production changes your machine may vary slightly in detail. Shakee Christmas Tree Shaker reserves the right to design and change the machine as may be necessary without notification.

This manual covers 4 models of tree shakers. The models are PTO, Electric, Gasoline and Hydraulic.

MAINTENANCE

Keep tractor, shaker or baler engine free of grass, pine needles, leaves or excess grease to reduce fire hazard. Do not change engine governor settings or overspeed the engine. Keep tractor baler and shaker in good operating condition and keep all safety devices in place. Periodically tighten all bolts, nuts and screws to insure that the shaker is in good condition. Check hydraulic hoses and fittings for damage or wear. Check all electrical connections.

STORAGE

Always drain gasoline from tank when storing gasoline model shaker, tractor or baler inside where fumes could reach an open spark. Always provide adequate ventilation when operating the unit indoors. Exhaust fumes are dangerous. Allow engine to cool before storing in an enclosure. Remove shaker from tractor, clean all foreign material from inside and underneath the shaker frame. Sand all areas where paint has chipped and repaint to prevent rust. Safety decals must be replaced immediately if damaged.

SAFETY INFORMATION

TRAINING

■ Know your controls and READ the operators manual and the manual provided with your tractor or baler.

■ Learn how to stop the tractor or baler engine and your shaker quickly in case of an emergency.

■ Do not allow children to operate the machine or adults to operate it without proper instructions.

■ Never allow anyone to sit on shaker.

PREPARATION

■ Keep area around shaker open and free of debris and needles.

■ Insure machine is properly adjusted and in good operating condition.

■ On PTO model, insure all safety shielding is properly installed and securely connected to tractor PTO.

■ On Gasoline model, if engine is subject to needles and trash, it must be shielded or the cooling fins will become clogged and overheat and damage the engine.

■ Always wear relatively tight and belted clothing when using the shaker. Loose clothing should not be worn as it could get caught in the moving parts or controls.

OPERATIONAL SAFETY

⚠ CAUTION

In addition to the design and the configuration of equipment, Hazard control and accident prevention are dependent upon the awareness, concern, prudence and proper training of personnel involved in the operation, transport, maintenance and storage of equipment.

■ Always wear relatively tight and belted clothing to avoid entanglement in moving parts. Failure to do so could result in serious injury. Wear sturdy work shoes.

■ Never use drugs or alcoholic beverages which can hinder alertness or coordination while operating. Consult your doctor about operating this machine while taking prescription drugs.

■ Replace any decals immediately if damaged. Clean area for decal with soap and water. Remove any dirt, grease or remnants of old decal. Re-apply pressure sensitive decal in same location.

■ Always operate tractor Power Take Off (PTO) at recommended speed 540 to 850 revolutions per minute (RPM) or vary as needed for best shaking action without tree damage.

■ Always operate Gasoline Engine at pointer indicated 2100 revolutions per minute (RPM).

■ Shut off PTO and shift tractor transmission into neutral before attempting to start engine.

■ On Gasoline Engine the drive is always engaged.

■ Read and observe all safety decals on the tractor, shaker, and baler.

■ Never allow bystanders near the machine while in operation.

■ During transport be alert for holes in terrain and other hidden hazards. Always drive slowly over rough ground.

■ Disengage power to shaker and stop engine before dismounting from tractor to make any repairs or adjustments.

■ On tractor mounted units raise shaker with 3 point hitch to transport.

■ Take all possible precautions when leaving shaker unattended. Disengage PTO, shut off engine or unplug shaker, lower shaker to the ground, shift into neutral, set parking brake, stop tractor engine and remove key from the ignition.

■ Front tractor weights or front tire ballast may be used to enhance front end stability on small tractors.

■ Check to make sure that the PTO is properly connected and drive line length is correct to prevent bottoming out or pulling apart during full lift range of the 3 point hitch.

OPERATIONAL SAFETY continued

■ On electric unit, use only heavy duty, grounded, 3 prong extension cord rated for at least 15 amps. on 110 volt, single phase power.

■ Keep all hardware and hydraulic fittings tight. Periodically check the condition of the hydraulic hoses.

■ On Gasoline engine model handle gasoline with care-it is highly flammable.

a. Use approved gasoline container.

b. Never remove the fuel cap of, or add gasoline to, a running or hot engine, or fill the fuel tank indoors. Wipe up spilled gasoline.

c. Open doors if the engine is run in the garage—exhaust fumes are dangerous. Do not run the engine indoors.

■ Keep the tractor and Shaker in good operating condition, and keep safety devices in place.

■ Keep all nuts, bolts, and screws tight to be sure the equipment is in safe working condition.

■ On the Engine model never store the equipment with gasoline in the tank inside a building where fumes may reach an open flame or spark. Allow the engine to cool before storing in any enclosure.

■ To reduce fire hazard, keep the engine free of grass, leaves, or excessive grease.

⚠ DANGER

Do not fill gasoline tank while engine is running. Allow engine to cool at least two minutes before refueling. If gasoline is spilled, move machine away from the area of the spill and avoid creating any source of ignition until the gasoline has evaporated.

⚠ DANGER

Do not run engine in an enclosed area. Exhaust gases contain carbon monoxide, an odorless and deadly poison. Do not operate the engine when an odor of gasoline is present or other explosive conditions exist.

SAFETY DECAL LOCATIONS

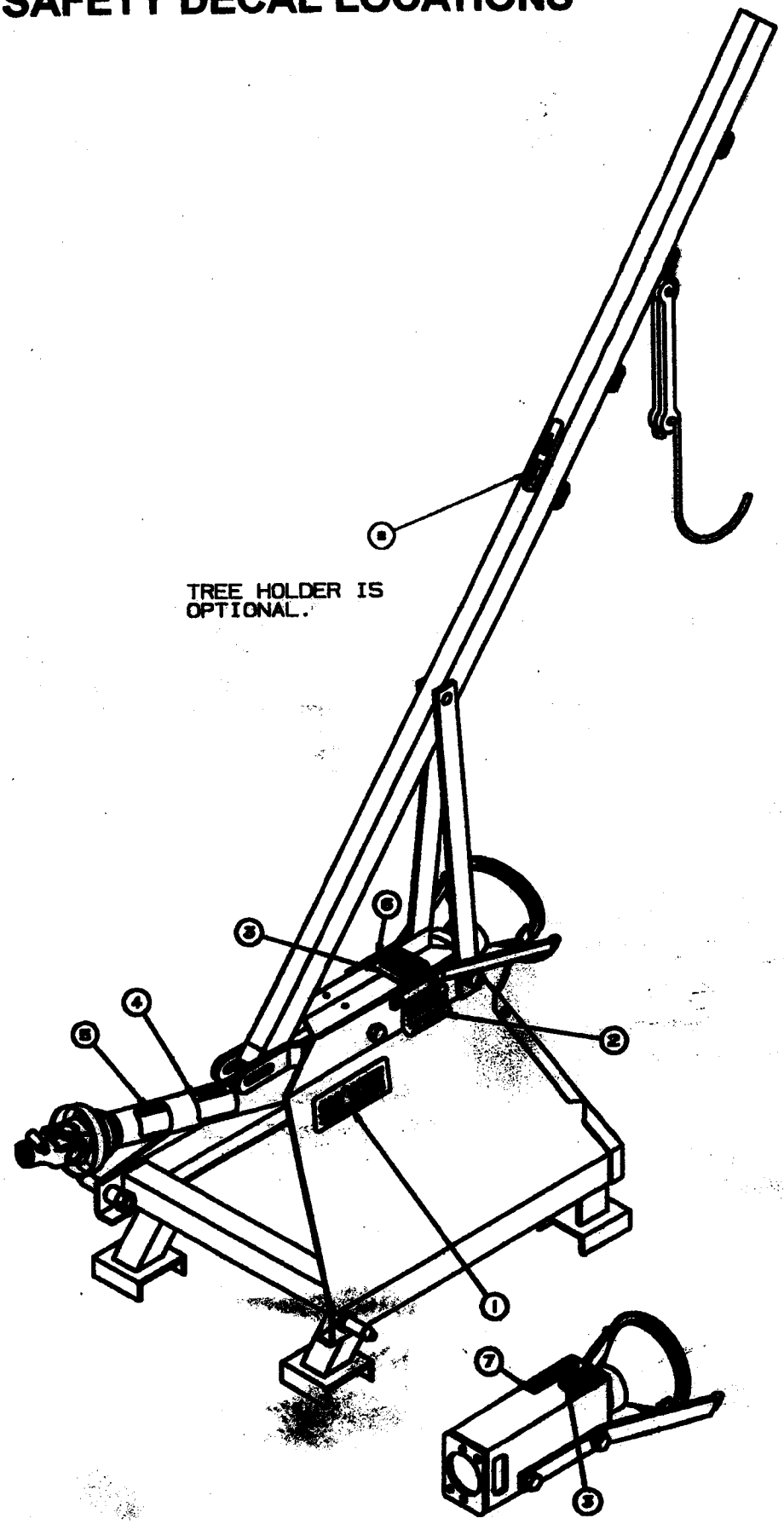

SAFETY DECALS

Replace Immediately If Damaged

SHAKEE®

-1

4"

SH2656

WARNING

TO AVOID SERIOUS INJURY OR DEATH

- Read Operators Manual Before Operating or Servicing.
- Allow No Children or Unqualified Persons to Operate.
- DO NOT Operate or Park In Raised Position.
- Block Securely and Disconnect Power Before Servicing.
- Use Only Grounded Outdoor 14GA Min Electrical Supply.
- Operate Only With Hitch Arms Attached on PTO Model.
- Start Tractor and PTO ONLY When In Tractor Seat.

SH2645

-2

3-

DANGER

KEEP AWAY! - NO RIDERS

- ENTANGLEMENT WITH ROTATING DRIVE PARTS OR FALLING OFF CAN CAUSE INJURY OR DEATH.
- KEEP ALL DRIVE SHIELD & GUARDS IN PLACE & IN GOOD CONDITION.

SH2701

3½

CAUTION

- HIGH PRESSURE OIL LEAKS CAN PENETRATE SKIN CAUSING SERIOUS INJURY AND GANGRENE. SEE OPERATORS MANUAL & CONSULT A PHYSICIAN IMMEDIATELY.
- DO NOT USE FINGER OR OTHER SKIN TO CHECK FOR LEAKS.
- LOWER LOAD, RELEASE PRESSURE, & BE SURE OIL IS COOL BEFORE LOOSENING FITTING.

SH2666

-7

4-

DANGER

SHIELD MISSING
DO NOT OPERATE

DANGER

SHIELD MISSING
DO NOT OPERATE

DANGER

ST159

DANGER

KEEP AWAY!
ROTATING DRIVE LINE

- ENTANGLEMENT CAN CAUSE SERIOUS INJURY OR DEATH.
- KEEP ALL DRIVE SHIELDS & GUARDS IN PLACE & IN GOOD CONDITION.
- TRACTOR PTO YOKE MUST BE LOCKED IN PLACE.
- ADJUST TRACTOR HITCH TO PROPER DIMENSIONS.

5-

ST160

WARNING

TO AVOID INJURY OR DEATH
FROM FIRE OR POISONOUS FUMES

- DO NOT RUN ENGINE IN ENCLOSED AREAS.
- SHUT OFF ENGINE BEFORE REFUELING
- NEVER FUEL ENGINE INDOORS
- NEVER FUEL WHEN ENGINE IS HOT
- DO NOT SMOKE WHILE REFUELING
- KEEP ENGINE CLEAN OF NEEDLES AND OTHER DEBRIS.

SH2651

-6

CAUTION

TO AVOID INJURY FROM HOOK IMPACT:

- RELEASE HOOK ONLY WITH LOW TENSION IN STRAPS.
- KEEP CHILDREN AWAY. NO HORSEPLAY

SH2666DL

-8

ASSEMBLY INSTRUCTIONS

⚠ WARNING

Always wear protective eye goggles. On hydraulic equipment use a piece of wood or cardboard to look for leaks. Never use hands or skin. Pinhole hydraulic leaks can penetrate skin. DO NOT TOUCH.

⚠ WARNING

NOTE: If fluid penetrates the skin, it must be surgically removed within a few hours by a doctor familiar with this form of injury or gangrene may result. Make sure hydraulic pressure has been released before disconnecting hydraulic hoses.

GASOLINE ENGINE MODEL

Refer to parts drawing on page 19.

Unpack your Tree shaker and lay all hardware and parts out on the floor for easy identification. Your gas engine has been shipped inserted into the front of the shaker. It must be removed and repositioned as shown on the parts drawing on page 17.

Remove the rear cover and the 3/4" x 5-1/2" hex head cap screws, located above the rear shield. Position the cone so the support casting holes with the 3/4" diameter holes in the housing and secure with the 3/4" x 5-1/2" hex head cap screws.

Cone assembly should be angled at approximately 25 degrees. Torque both 3/4" hex head cap screws to 300 ft. pounds.

NOTE: The idler bracket assembly has been already installed onto the shaker and the motor plate installed to the motor and the pulley on the motor.

Assemble guard/guide to upper rear portion of the shaker frame, securing with two 3/8" x 6" hex head cap screws and 3/8" flange nuts. Torque these bolts to 35 ft. pounds.

Assemble Category I hitch pins in lower front holes. Install spacer and 3/4 hex castle nut. Torque castle nut to 300 ft. pounds and install 3/16" cotter pin. Re-install cover, using 5/16 x 1 hex head cap screws, and torque to 20 ft. pounds.

The motor and motor mount plate assembly will be mounted on top of the front shaker cross angle but with the two square tubes between them and providing room for the belt which will run between the motor mount plate and the cross angle.

On both the Briggs and Honda engine, the motor mount plate will bolt to the outer (hitch end) three (3) holes of the square spacer tubes, but later machines have four (4) holes.

With the BRIGGS engine, the fourth hole will not be used and the fourth hole will extend inside but not be used. With the Honda engine, the motor mount will still bolt to the outer plates but the clamp bolts will attach to the inner two (2) holes of the bars so that the motor holes extend outward about 3 inches further with the Honda engine than it does with the Briggs.

Honda Engine: Position as shown on page 19 (Parts List). Note that the Honda engine has a separate throttle control cable which faces outward. Check to be sure it is adjusted so that the engine will stop at one end of the travel and choke will be fully applied at the other end of the travel. This should be properly adjusted upon arrival.

Install the angle clips underneath the angle using the 1/2" bolts that fasten to the motor mount plate. (See page 19, parts drawing.) Slip the belt over the shaker drive pulley, over the two idlers pulleys and wrap around the engine puley. Slide the engine sideways as needed so that the belts run in line with the idler pulleys. Then slide the engine outward from the shaker until the belt is tight and tighten the six motor mount attaching bolts. Be sure the engine does not contact the housing.

BELT ADJUSTMENT: The belt should be just tight enough so that the two (2) belts can be pushed together under the motor so they touch with two (2) fingers and without excessive effort.

PTO MODEL

Refer to parts drawing on page 21.

Unpack your Tree shaker and lay all hardware and parts out on the floor for easy identification. Your shaker has been shipped with the rear half of the PTO assembled to the shaker cone assembly.

Remove the rear cover and the rear 3/4 x 5-1/2 hex

head cap screw, located above the rear shield. Pivot the cone assembly up in line with the support casting hole with the rear 3/4" diameter hole and secure with the 3/4 x 5-1/2" hex head cap screw, previously removed. Cone assembly should be angled at approximately 25°. Torque both 3/4 hex head cap screws to 300 ft. pounds.

Assemble guard/guide to upper rear portion of the shaker frame, securing with two 3/8 x 6 hex head cap screws and 3/8 flange nuts. Torque these bolts to 35 ft. pounds. Assemble Category I hitch pins in lower front holes. Install spacer and 3/4 hex castle nut. Torque castle nut to 300 ft. pounds and install 3/16 cotter pin.

Re-install cover, using 5/16 x 1 hex head cap screws, and torque to 20 ft. pounds. Assemble the front half of the PTO to the rear half, being sure to lubricate the slip shaft prior to assembly. Lubricate the PTO grease fittings.

Your shaker unit is now ready to be mounted on a tractor.

ELECTRIC MODEL

Refer to parts drawing on page 21.

Unpack your Tree shaker and lay all hardware and parts out on the floor for easy identification. Your shaker has been shipped with the electric motor pulley assembled to the shaker cone assembly. Remove the rear cover and the rear 3/4 x 5 1/2 hex head cap screw, located above the rear shield. Pivot the cone assembly up in line with the support casting hole with the rear 3/4" diameter hole and secure with the 3/4 x 5 1/2" hex head cap screw, previously removed.

Cone assembly should be angled at approximately 25 degrees. Torque both 3/4 hex head cap screws to 300 ft. pounds. Assemble guard/guide to upper rear portion of the shaker frame, securing with two 3/8 x 6 hex head cap screws and 3/8 flange nuts. Torque these bolts to 35 ft. pounds.

Assemble Category I hitch pins in lower front holes. Install spacer and 3/4" hex castle nut. Torque castle nut to 300 ft. pounds and install 3/16" cotter pin. Install foot switch into rear cover using 1/4 NC x 1 full thread HHCS (2) hex nuts. Plug switch into motor and re-install cover, using 5/16" x 1" hex head cap screws, and torque to 20 ft. pounds. Check that belt shield (14) is installed and hardware is tight. Install V-Belt over motor and drive pulleys and use adjustm ent nut on eye bolt to remove slack from belt.

Your shaker unit is now ready to be mounted on a tractor, or use as is.

CONVERSION TO ELECTRIC FRONT FOOT SWITCH

Conversion to electric front foot switch is possible by purchasing the foot switch conversion kit (item 26). This kit comes complete ready for installation. The switch's shield assembly (item 14) used on units prior to serial number 2300 must be left in place, as it acts as a belt shield. See Assembly Instructions for installation.

⚠ CAUTION

Use only a heavy duty, grounded, 3 prong, outdoor type, extension cord in good condition and rated for 15amp./min. Operate only on 110 volt single phase power.

ELECTRIC MODEL WITH SUBSTITUTE MOTOR

We recommend using a 110 volt, single phase, 1 HP, 1750 RPM, TEFC electric motor. All drive components, including pulley and belts, were originally designed around these specifications. Using a different motor, other than what is recommended, may cause belt and drive problems. Depending upon your electric motor frame style, some modification may be required in the motor mount plate to assure proper mounting.

The small pulley may be repositioned, inward or outward, on the 5/8" diameter motor shaft in order to gain proper belt alignment. Both pulleys must be in line during operation. Misalignment of belt pulleys and belt will cause premature failure of the belt.

Assemble guard/guide to upper rear portion of the shaker frame, securing with two 3/8" x 6" hex head cap screws and 3/8" flange nuts. Torque these bolts to 35 ft. pounds. Assemble Category I hitch pins in lower front holes. Install spacer and 3/4" hex castle nut. Torque castle nut to 300 ft. pounds and install 3/16" cotter pin. Re-assemble cover, using 5/16" x 1" hex head cap screws, and torque 20 ft. pounds.

ASSEMBLY INSTRUCTIONS

CONVERSION FROM PTO MODEL TO ELECTRIC MODEL

Refer to page 21.

Remove the rear cover and entire cone drive assembly from the shaker. Using a punch, remove the 3/8" diameter roll pin which holds the rear half of the PTO to the drive shaft.

Install 2- 2-1/8 O.D. spacer washers, 1/4" x 7/8" woodruff key, and 5" O.D. pulley onto the main drive shaft and tighten 3/8" set screws. Install electric motor, mounted on the motor mount plate assembly, to shaker rearward. Install cone drive assembly into shaker frame, re-install 3/4" x 5-1/2" hex head cap screws and torque to 300 ft. pounds. Assemble belt to pulleys. Check for proper alignment.

If any misalignment is present, loosen 1/4" set screws on small pulley, located on electric motor shaft and slide pulley inward or outward to obtain proper belt alignment. Tighten 1/4" set screws in small pulley. Install 5/16" eye bolt over 3/8" bolt that is welded to the main shaker frame, install plastic spacer and securing eye bolt extension lug attached to the motor mounting plate.

Install the hose spacer and a 5/16" flange lock nut to threaded end of eye bolt. By tightening the 5/16" flange lock nut, belt tension is maintained. Install frame with 5/16" hex head cap screw and flange lock nut.

Install motor plug into the female receptacle attached to on\off switch. Install cover, using 5/16" x 1" hex head cap screw. Re-check all hardware for proper torque and adjustment prior to operation.

CONVERTING ELECTRIC MODEL TO PTO MODEL

Reverse above instructions and secure rear half of PTO to main drive shaft using a 3/8" x 1-3/4" spirol pin. Be sure 1/4" x 7/8" woodruff key is installed properly. Some misalignment between cone drive shaft and PTO yoke cross hole is intentional to maintain bearing adjustment.

CONVERTING ELECTRIC MODEL TO AIR FOOT SWITCH

The SH2900SK kit will convert any SHAKEE electric shaker to an air-actuated electric foot switch with 8 foot hose to allow location as desired.

Installation Procedure: The new air electric switch is mounted to a bracket which is bolted under the left side (looking into the cone) of the housing at the end opposite the cone, and angling downward resting against the angular cross member.

The only change required is to drill appproximately a 3/8" hole in the side of the frame to the dimensions shown on the sketch, lay the bracket in under the frame and install the bolt. Tighten the bolt while holding the switch down tight against the angle.

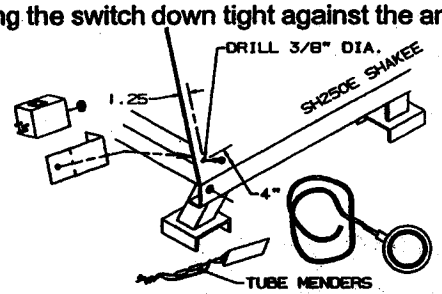

AIR FOOT SWITCH INSTALLATION INSTRUCTIONS
CONVERTS MACHINES MADE PRIOR TO 1997

The motor has a male plug on it, which is now plugged into the foot switch. Unplug and plug into air switch box. Your power extension cord will have a female plug, which will plug into the side of the switch box and the air hose will slip onto the nipple in the front end of the switch box. It is not necessary to remove the old foot switch, but you may if desired.

Two hose menders are included on a wire tag, which should be wired to the underside of the shaker frame so that it will be available if you ever cut or rupture your hose. Cut the hose end square and press the mender into each end approximately centered, until tight.

OPERATING INSTRUCTIONS: The switch is operated by a very light air pressure generated by pressing lightly on the air bellows pad. Pressing once will turn it on, pressing it again will turn it off. Do not use excessive force or it may force the air out of the system. Air is required for it to work. To correct, merely unplug the air hose and re-connect.

ASSEMBLY INSTRUCTIONS

NOTE: Be careful of where the hose is run, so that it does not get under the feet of the SHAKEE as they are sharp and tend to move in operation. They will cut the hose in two. If this happens, splice using the hose menders discussed above. These are not easily available locally, so if you use one it would be a good idea to order another pair.

If you would like the foot switch attached to the frame of the SHAKEE near where the old switch was, or elsewhere, the pad has holes in it. You merely drill a hole in the frame, and screw the foot pad onto the frame wherever desired. Run the hose where it will not become damaged.

HYDRAULIC MODELS

NOTE: These special units are a basic shaker assembly which must be securely mounted onto a heavy frame to provide both support and weight to oppose the shaker forces. This mounting and adaptation is the responsibility of the dealer or installer and is completely out of the control of Pacific West Christmas Tree Co.

HYDRAULIC MODEL ASSEMBLY

Refer to parts drawing on page 23.

Install 1-1/4" coupling and flex coupling insert into the shaker shaft assembly using 1/4" x 7/8" woodruff key and set screw and tighten. Wetting the insert with water will make installation of the insert easier. Install either 5/8" or 7/8" bore coupling onto motor shaft but leave set screw loose. Install either 40 series motor using 7/16 NC x 1-1/4" hex head cap screw and 7/16 NC nuts, or install 50 series motor against end of tube assembly using 1/2 NC x 1-3/4" hex head cap screw, 1/2 NC nuts and 1/2" spacer washer. Align coupling before tightening nuts.

Do not over tighten nut causing damage to motor mounting ears.

Be sure coupling is aligned and pushed snuggly together before tightening set screw. See page 23.

It may be necessary to loosen 3/4" shaker bolts to get shafts properly aligned. **NOTE:** any misalignment or binding will damage the motor.

Attach minimum 3/8" inside diameter hydraulic inlet lines for up to 5 gallons of flow and 1/2" inner diameter inlet line for over 5 gallons of flow using required fittings. (Hoses and fittings are not furnished.)

40 series motor has 1-1/16 - 12 SAE O-ring port and 50 series motor has 1-5/16 - 12 SAE O-ring ports.

A bi-rotational motor is permissable and may be run either direction.

If using your own motor (or pump used as a motor,) connect the larger port (outlet) to the low pressure hose.

Connect a 1/4 minimum diameter hose and fitting to motor case drain port. (Hose and fittings not furnished.) If provided on motor.

NOTE: Damage to motor seal will result if back pressure in return line is excessive or if case drain not installed where needed.

Attach inlet hose to tractor quick coupler or to pump circuit. Connect return line to tank or to tractor quick coupler. Note that restriction over 100 PSI in the return line can cause damage to motor seal. Be sure return line quick coupler is properly seated and not worn excessively. Connect case drain back to tank.

GENERAL

Shaker shaft speed is determined by the volume of oil flow throught the motor and the size of the motor. Shaker shaft speed should be 540 to 850 RPM with the higher speed more preferable on the hydraulic model.

The correct motor size can be determined by dividing the hydraulic flow of your pump by the desired shaker speed.

Example: 3 gallon per minute pump capacity.

$$\frac{3 \text{ gallons}}{\text{minute}} \times \frac{231 \text{ in}^3}{\text{gallon}} = \frac{693 \text{ in}^3}{\text{minute}}$$

693 cubic inch per minute divided by 850 RPM = .8 cubic inch displacement per revolution of motor.

Standard cross motors have a displacement of .75 cubic inch for the 40 series and a 2.7 cubic inch for the 50 series.

On tractors and balers, the volume of the pump flow can be varied somewhat by changing the engine speed.

The Hydraulic shaker assembly is designed to allow installation of either a 40 or 50 series motor.

The 40 series motor has an SAE "A" mounting flange with a 5/8 diameter shaft.

The 50 series motor has an SAE "B" mounting flange with a 7/8 diameter shaft.

OPERATING INSTRUCTIONS

For best results when operating your Shakee Christmas Tree Shaker, place the butt of the Christmas tree onto the guard guide and slide into cone; holding the tree approximately 1/3 the distance from the top at a 25 degree angle. Allow the tree to shake approximately 10 to 15 seconds or as required. By experimenting with where you hold the tree either farther out or closer to the butt, you can determine which gives the best results.

When shaking trees that are very cold, care should be taken to prevent damage to the very top or tip of tree. The shaking action may damage or break the leader or top whorl if not careful. Holding the tree further towards the tip decreases the chances of damage to the tip.

Always operate tractor Power Take Off (PTO) at recommended speed 540 to 850 revolutions per minute. (RPM)

The shaker should always be operated while resting on the feet and never with the wheels in the transport position or while supported by the tractor hitch.

The wheel kit is for field transport use behind a tractor etc. only. It is not for road use and should not be operated at over 10 miles per hour.

Keep the wheels lubricated with a general purpose grease in the fittings on the wheels.

The lift handle may be easily operated by using your right foot to avoid having to bend over. Hook the handle under the clip on the pull bar to retain in the raised or transport position.

Warning

Keep all shields in place and in good condition.

ELECTRIC MOTOR MODEL.

This shaker is equipped with a 1 h.p. sealed motor and with an overload circuit breaker. Reset may be automatic, in which case the motor will reset it self and restart when it cools off. If manual, you must push the reset button on the motor when it cools off. *NOTE: Most* overloads are due to low voltage from poor or small cords or wiring.

AIR FOOT SWITCH. The SH250 is equipped with an air actuated remote foot switch on all 1997 and later machines. The foot bellows maybe placed wherever is most convenient. Press once to turn on, again to turn off. NOTE: Keep the air tube out from under the frame or it may be cut. If the tube is ruptured, cut it off smooth and insert a nylon hose mender sleeve in both ends to rejoin. Two of these were shipped with the machine on a wire tag and fastened to a tag inside the housing.

Warning

Wear protective clothing and eye protection.

Warning

NOTE: If fluid penetrates the skin, it must be surgically removed within a few hours by a doctor familiar with the form of injury or gangrene may result.

Warning

Operate hydraulic pump slowly and check for leaks. Always wear protective eye goggles and use a piece of wood or cardboard to check for suspected leaks. Never use hands or body. Pinhole hydraulic leaks can penetrate skin. DO NO TOUCH.

OPERATING HINTS: Note the *position* of the tree *trunk* relative to the cone. Increasing the upward angle of the tree relative *to* the cone increases the amount of *shake* on tree. Decreasing the angle of the tree relative to the cone reduces the amount of *shaking* action. Testing the different positions will give you the specific action and results you require for your application.

The butt of the tree must be long enough to rest in the cone *before* the low branches interfere with the top of the cone. Otherwise, it will *bounce around* in the cone *and* not shake well. A butt of approximately this *length* is usually required anyway to fit in most tree *stands.*

GAS ENGINE MODEL

See the engine operating and service instructions which are enclosed for the specific engine provided. Some choke is usually required when the engine is cold but after operating should not be necessary.

For Honda Engine (optional after 9/96):
See the Honda section in the back of the manual. Check to be sure there is adequate oil before starting machine. To start first turn the fuel valve on. Fuel valve is below the tank on the left side.

The throttle needs to be pulled to the right to start. Full travel should give full choke. Move near the center for normal tree shaking. Running too fast may break the tops out of the trees especially in cold weather. To shut off, push throttle all the way to the left.

For Briggs & Stratton Engine: Keep the speed set properly for the right shaking action. This is only about 2100 rpm. Throttle engine to idle, this will be adequate for most trees. Running engine at faster speed could cause damage to shaker & tree top.

For Tecumseh Engine (used prior to 1993): Keep the speed set properly for the right shaking action. This is only about 2100 RPM, align the throttle lever with the pointer to achieve this speed. The pointer may be adjusted as needed. If the engine is operated too fast it will actually cause damage to the tree as mentioned above.

It is a good idea to shut the engine off between trees if there is several minutes of pause. However it does not hurt to leave it running.

IMPORTANT - Be sure that the engine is not positioned such that it is collecting debris from the trees as this can plug the cooling air inlet on top of the engine and will cause engine overheating and damage. If it is operated adjacent to a baler it may be necessary to provide a shield to cover this area.

⚠ DANGER

Do not fill gasoline tank while engine is running. Allow engine to cool at least two minutes before refueling. If gasoline is spilled, move machine away from the area of the spill and avoid creating any source of ignition until the gasoline has evaporated.

⚠ DANGER

Do not run engine in an enclosed area. Exhaust gases contain carbon monoxide, an odorless and deadly poison. Do not operate the engine when an odor of gasoline is present or other explosive conditions exist.

SERVICE INSTRUCTIONS

LUBRICATION INFORMATION

Due to the quality and simple design of the McCanse Christmas Tree Shaker, minimal servicing and upkeep is required.

On the PTO model make sure that the PTO shaft inside the plastic shielding is lubricated weekly. With the tractor engine off and ignition key removed, disconnect PTO from tractor. Slide shaft apart and lubricate all four sides of square shaft. Re-assemble and re-attach PTO to tractor. A grease slot is provided in the plastic shielding for access to the square shaft. Grease the universal joints on the front and rear of the PTO drive.

The bearings on the shaker are sealed and require no additional lubrication.

⚠ WARNING

Before performing any maintenance, lower the shaker to the ground and turn off the tractor. Disengage the PTO drive and remove the tractor key to make sure no one can start the shaker while maintenance is being performed. Relieve hydraulic pressure from the hydraulic hoses before disconnecting. Be sure electric model unit is unplugged from power source.

GAS ENGINE MODEL

Clean area around oil fill dipstick, remove dipstick and check to be sure oil is in operating range (between marks on dipstick). Add oil if necessary but DO NOT OVERFILL. Install dipstick assembly firmly.

Check the oil regularly and change at the end of each season.

⚠ DANGER

Do not fill gasoline tank while engine is running. Allow engine to cool two minutes before refueling. If gasoline is spilled, move machine away from the area of the spill and avoid creating any source of ignition until the gasoline has evaporated.

Check fuel level. Refuel with unleaded gasoline, outdoors or only in a well ventilated area.

Check air cleaner; service if necessary. The engine is air-cooled and requires a large volume of air to keep cool.

Check to be sure engine is free of dirt and debris. Pay particular attention to the cooling fins, governor parts and muffler.

⚠ DANGER

Do not run engine in an enclosed area. Exhaust gases contain carbon monoxide, an odorless and deadly poison. Do not operate the engine when an odor of gasoline is present or other explosive conditions exist.

MAINTENANCE AND STORAGE

DRIVELINE MAINTENANCE

Read all of this section before starting any repair. Many steps are dependent on each other.

Always keep 3/4" NC x 5 1/2" hex head cap screw torqued to 300 ft.pounds. This is 100 pounds pull on the end of a 3 foot wrench.

Trouble shooting the driveline is an important part of maintenance. Check for loose bolts or bad bearings. Bearing failure is indicated by noise and excessive side and end play in driveline shaft.

If noted, disassemble drive and repair as required. The belting attached to the cone is of special composition. No substitutions must be made if this belting is replaced. Frequently check belting for cracks, tears, or any sign of failure. If any of these conditions are present, replace the belting immediately. Be sure all hardware is tight and torqued.

If belting is allowed to be operated in a damaged condition, possible injury or driveline failure is possible.

Be sure to install belt as shown in following diagram.

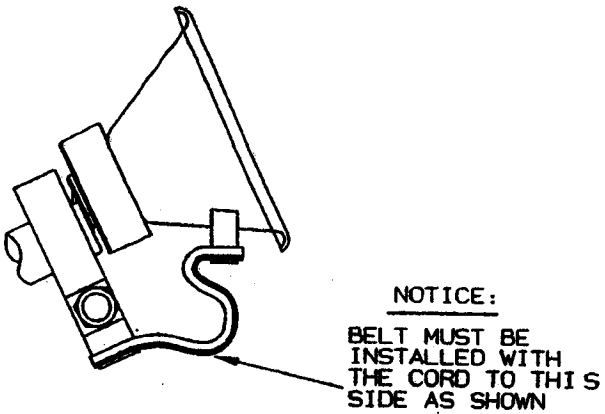

CONE MAINTENANCE

If cone retention bolt 1/2" x 1 hexagon socket head becomes loose or cone must be removed or replaced apply Loktite and torque to 85 ft. pounds. This bolt is under the drive (freeze) plug in the bottom of the cone and it must be removed first. Do so by prying out from under the cone through the drain hole in the side or drill and pry out. This plug (#49, page 20) is a 1-3/8" freeze plug and can be found in any auto parts store. To install, drive in and flatten with a punch and hammer to secure. **NOTE:** The freeze plug must be used or debris will get into the bearings and ruin it. If missing, replace immediately. It may be tack welded in place if necessary.

⚠ WARNING

Always keep all shields and PTO guards, furnished with machine, in place and in good working order. Failure to do so could result in operator being entangled in rotating parts, resulting in injury or death. Keep clear of rotating parts at all times. Keep clear of rotating parts which may be exposed when inspection covers are removed.

⚠ WARNING

Check driveline connections to shaker and tractor before operation. Be sure PTO-Quick Disconnect locks are operating and locked. Failure to do so could result in driveline becoming disconnected from the tractor or cutter. Personnel could be struck by fast rotating driveline resulting in serious injury.

HYDRAULIC MODEL

Periodically inspect hoses and fittings for wear or damage. Do not disconnect hoses while pump is running.

⚠ WARNING

All hydraulic connections must be tight before starting oil flow. Check to make sure all hoses are in good condition and are not positioned so they could be pinched or cut during operation. Keep hands and body parts away from pressurized hydraulic lines.

⚠ WARNING

Always wear protective eye goggles and use a piece of wood or cardboard to check for suspected leaks. Never use hands or body. Pinhole hydraulic leaks can penetrate skin. DO NO TOUCH.

⚠ WARNING

NOTE: If fluid penetrates the skin, it must be surgically removed within a few hours by a doctor familiar with the form of injury or ganagrene may result. Make sure the weight of the machine has been taken off the lift before parking.

⚠ CAUTION

Periodically check eletrical connections and switches. Use only heavy duty, grounded, 3 prong, outdoor extension cord in good condition and rated at least 15 amps on 110 volts. Protect connector pigtail/extension cord joint from moisture and physical damage.

ENGINE MAINTENANCE

Honda Engine: See Honda Maintenance Instructions on page XX. Operate the engine at approximately 1/3 to 1/2 speed on the throttle. **DO NOT RUN AT FULL THROTTLE.** Running engine too fast may actually break the tops out of the trees and will cause damage to the Shaker and the engine.

Briggs & Stratton Engine: Adjust throttle to idle after starting. This speed (approximately 2200 rpm) should be adequate for most shaking applications.

Over speeding engine could cause damage to trees and shaker and engine.

Honda 5.5 Engine: Run at approximately ½ throttle (about 2200 rpm) for most conditions.

Tecumseh Engine (used prior to 1993): A pointer or indicator is provided and usually mounted in the cable bracket. It should be positioned so that when the throttle lines up with it, the engine will be running @ 2100 RPM. Adjust as needed.

Read information for the engine.

Disconnect spark wire before performing any engine maintenance.

The drive belt must be kept fairly tight or it may slip under load. Adjust by loosening the three (3) bolts on each side that hold the motor mount plate to the square tubes. Slide the engine outward using a screwdriver or pry bar until the belt is tight enough to require approximately 20 pounds of push to deflect it 3/4 of an inch. Then retighten the six (6) bolts securely. If an adjustable drive pulley is used on the motor make sure that the two halves do not screw apart allowing the belt to ride on the hub. This will cause serious slipping problems. The shaker speed must be maybe somewhat varied by the adjustment of this pulley where used.

STORING SAFELY

Never store equipment with gasoline in the tank inside a building where fumes may reach an open flame or spark. Allow engine to cool before storing in an enclosure.

Do not run engine indoors--exhaust gases contain carbon monoxide, an odorless and deadly poison.

Remove all accumulated debris from shaker.

Sand areas where paint is chipped and repaint to prevent rust. Lubricate all locations to prevent moisture damage during storage.

TROUBLE SHOOTING

PROBLEM	POSSIBLE CAUSE	SOLUTION
Shaker unit moves or slides on asphalt surface.	Needs additional weight.	Remove rear cover and add a sandbag or block to weigh dovvn the unit.
In heavy or dense trees, large amount of undropped dead needles.	Not enough time, tree wet or shaker running slow.	Allow tree to shake several additional seconds to help dis-lodge dead needles or tilt tree in a more vertical position to allow dead needl es to drop from bottom of tree. Check and/or increase shaker speed.
Cone does not rotate at speed. (Hydraulilc model)	Lack of flow through motor.	Check for inadequate flow to motor or restriction in any line.
If cone rotates and trys to distort belt.	Bearing tight or damaged.	With belt loose, cone should spin freely by hand. Excessive drag or end play will require replacing bearing.
Shaker runs too fast or causes damage with gas engine model.	Overspeeding of engine.	Slow down engine. It only operates at approximately 2100 RPM for proper shaking action.
Engine fails to start or evidences other problems.		See engine service section.
Cone does not rotate at full speed under load. (Gas or Electric model)	Belt worn.	Replace belt.
	Belt loose.	On Gasoline model, loosen bolts holding engine mount and slide engine away from cone to tighten belt. On Electric model slighty tighten nut to apply more spring force on motor mounting plate.
Electric motor cuts out.	Motor automatic thermal overload tripping due to inadequate power supply.	The motor will not overheat and overload in any reasonable use unless the power supply is inadequate. Use a larger extension cord and make sure the power source is also adequate. Check voltage at the point where the shaker plugs into the cord with the shaker shaking the tree. If the voltage drops below 100 volts power supply is a problem.
	Poor connections or defective switch.	Have an electrician check the connections, circuitry and switch and correct as needed.

TROUBLE SHOOTING

PROBLEM	POSSIBLE CAUSE	SOLUTION
Makes a loud banging noise.	Clamp bolts holding the main shaft bearings not torqued adequately, working back and forth.	Must be tightened to 250-350 ft.lbs. that is 300 pounds on the end of a 1' long wrench or 100 pounds on the end of a 3' long wrench. Draw the sides in tight against the bearings. This must be tight so it does not move.

PARTS LIST FOR GASOLINE ENGINE SHAKER MOUNT

NO.	PART #	QTY.	DESCRIPTION
1	SH2799	2	1/2" Bore - 4 OD Idler
2	SH2795		Lower Sheave Plate
3	SH2792	2	Front Mounting Clip
4	SH2794	2	Clamp Tube
5	SH2802	1	7/8" ID x 2" OD - A Grove Sheave
6	SH2798	1	Motor Mounting Plate
7	SH2895	1	Gasoline Engine - (3 3/4 HP) (Briggs & Stratton)
7A	SH2790	1	Gasoline Engine - (3 1/2 HP) (Tecumseh - used prior to 1993.)
8	2612	1	5" OD Pulley
9	SH2801	1	V Belt (A-67/4L69) for Briggs Engine
9A	SH2883	1	V Belt (A-74/4L760) for Honda Engine
10	SH2899	1	Converts from Electric or PTO to 3¾ hp Briggs & Stratton engine
10A	SH2889	1	Converts from PTO or Electric to 5 hp Honda gas engine
11	SH2890	1	Engine Conversion Kit (Converts Tecumseh 3 1/2 hp engine to Briggs & Stratton 3 3/4 hp, includes items 4, 6, 7, & Hardware)
12	SH2888	1	Convert Briggs & Stratton or Tecumseh to Honda 5.5 hp
13	SH2885	1	Honda 5.5 hp Motor
14	SH2886	1	Throttle Cable Asy
15	HL177	1	5/8 OD x 7/8 Plastic Sleeve
20	O/L*		3/16" X 3/16" X 1 1/4" Key
21	O/L*		5/16 NC X 1 1/4 Hex Head Cap Screw
22	O/L*		5/16" Lockwasher
23	O/L*		5/16" Flatwasher
24	O/L*		3/8 NC Flange Locknut
25	O/L*		1/2 NC X 2" Carriage Bolt
26	O/L*		1/2 NC X 3 1/2" Carriage Bolt
27	O/L*		1/2 NC X 5 1/2" Carriage Bolt
28	O/L*		1/2 NC Hex Nut
29	O/L*		1/2" Lockwasher
30	O/L*		1/2" Flatwasher
31	O/L*		5/8" SAE Flatwasher
32	O/L*		5/8" Flatwasher
33	O/L*		1/2 NC x 2 1/2 HH Capscrew
34	O/L*		5/16 Flange Lock Nut
35	MF108	3	5/16 NF x 1 1/4 Hex Head Capscrew Grade 5
36	MF057	1	1/4 NC x 3.5" Full Thread Cap Screw
37	MF409	3	1/4" Standard Flat Washer
38	MF306	2	1/4" NC Hex Nut

* O/L - OBTAIN LOCALLY

{SEE PAGE 20 FOR SHAKER FRAME PARTS}

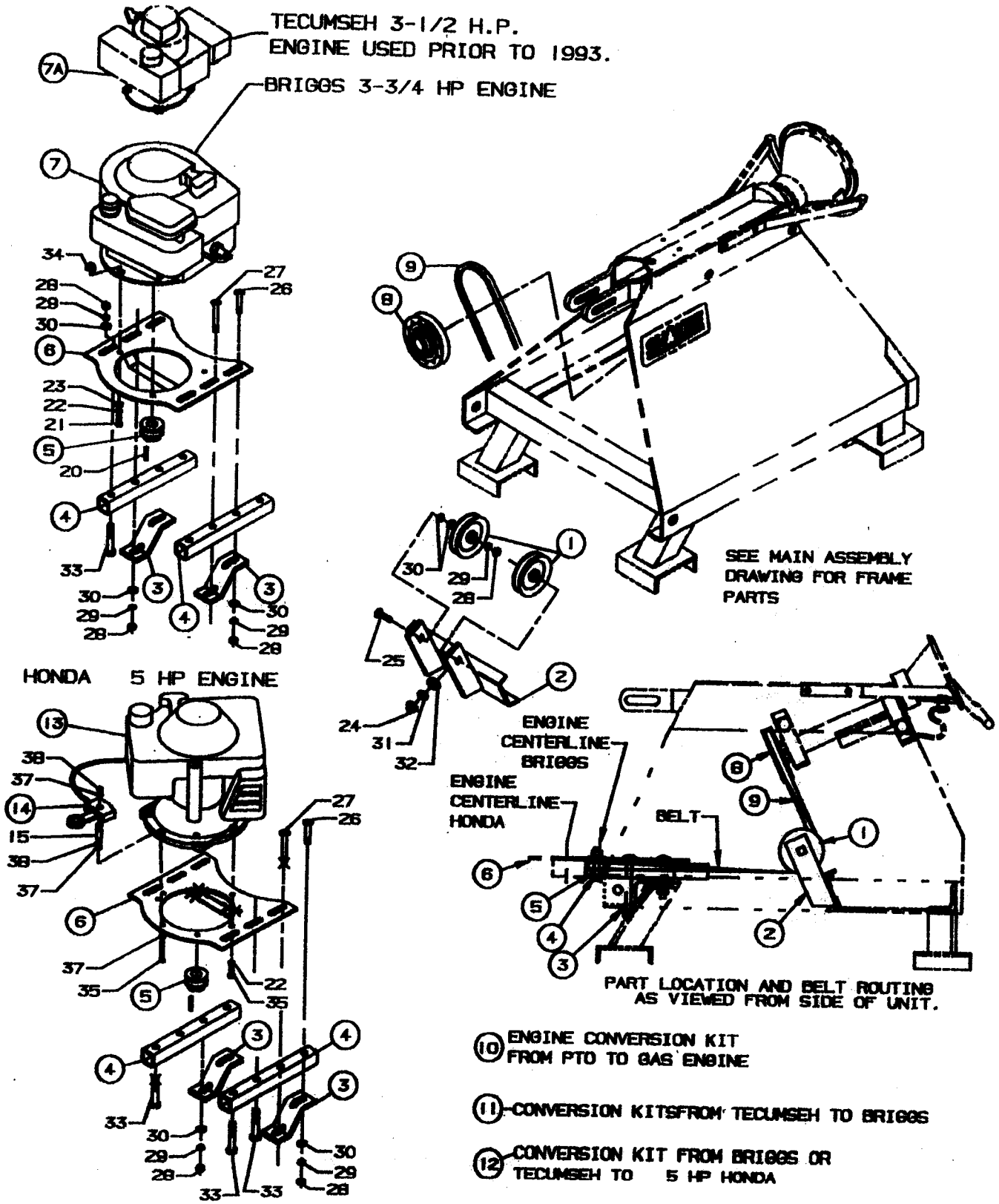
TECUMSEH 3-1/2 H.P.
ENGINE USED PRIOR TO 1993.
BRIGGS 3-3/4 HP ENGINE
HONDA 5 HP ENGINE
SEE MAIN ASSEMBLY DRAWING FOR FRAME PARTS
ENGINE CENTERLINE BRIGGS
ENGINE CENTERLINE HONDA
BELT
PART LOCATION AND BELT ROUTING AS VIEWED FROM SIDE OF UNIT.
10 ENGINE CONVERSION KIT FROM PTO TO GAS ENGINE
11 CONVERSION KITSFROM TECUMSEH TO BRIGGS
12 CONVERSION KIT FROM BRIGGS OR TECUMSEH TO 5 HP HONDA

PARTS LIST FOR ELECTRIC AND PTO SHAKERS

NO.	PART#	NO. REQD.	DESCRIPTION
1	2600	1	Shakee Frame Weld Asm
2	2710	1	Rear Cover (For Serial #1300 & above) or
	2617	1	Rear Cover (For Serial #1299 & below)
3	2742	1	Guard/Guide for 6" and 7" Cone
4	2634	2	Belt/Clamp
5	2695	1	Retaining Belt & FM10-P13
6	2712	1	Cone Assembly Only
	2649A	1	Cone Assembly (Includes items 6, 7, 8, 9, also order item #49 when ordering this part)
7	2708	1	Retaining Washer
8	2636	3	35MM I.D. x 72 MM O.D. Bearing
9	2679	3	Snap Ring (3 1/8 O.D. Waldes Truarc #N5000-281)
10	2614	1	Shaft Assembly
11	2678	2	Cast Housing
12	2633	1	Counter Balance
13	2640	1	PTO Drive Complete (See pg. 23)
14	2687	1	Belt Shield
15	2686	1	V Belt A29 or 4L310
16	2612	1	5" O.D. Pulley
17	2637	2	Spacer Washers (Electric Model)
18	2689	1	2.5 O.D. Pulley
19	2696	1	Electric Motor 1 HP-110 volt-T.E.F.C.
20	2623	1	Motor Mounting Plate
21	2657	1	Mounting Pin (Motor)
22	2697	2	Category I Pin
23	2699	1	Decal Set
24	2693	2	Nylon Flange Bushing
25	SH2896SPP	A/R	Red Touch-Up Spray Paint 1202
26	SH2880CA	A/R	Electric Foot Switch & Cover Conversion Kit
26A	SH2900SK	1	Air Foot Switch Conv. Kit for Electric 1997-on
27	SH2881SA	1	Electric Foot Switch Assembly used thru 1996
27A	SH2901AS	1	Air Switch Box Asy - made 1997-on
27B	SH2902BK	1	Air Switch Box Bracket
27C	SV3050BL	-	Air Switch Bellows & Hose
27D	SV3025MR	-	Air Switch Hose Mender Tubes (2)
28	SH2738	1	Complete Drive Asy
29	2648	2	Housing, Bearing & Snap Ring Asy
30	O/L*	-	1/4 NC x 1" Hex Head Cap Screw Gr 5
31	MF001	-	3/4 NC x 5 1/2" Hex Head Cap Screw
32	MF296	-	3/4" NC Lock Nut
33	MF303	-	5/16" NC Flange Lock Nut
34	MF005	-	3/8 NC x 6" Hex Head Cap Screw Gr 5
35	MF297	-	3/8" NC Flange Lock Nut
36	MF010SHB	-	1/2 NC x 3/4" Socket Head Bolt
37	MF870	-	1/4 x 7/8" Woodruff Key
38	O/L	-	3/8 x 1 3/4" Spirol Pin (Heavy)
39	O/L	-	3/8 " NC x 1/2" Length Set Screw
40	O/L	-	1/8 x 1/8 x 1" Key
41	O/L	-	1/4 " NC x 3/8" Length Set Screw
42	O/L	-	1/8" Hair Pin
43	2721	1	1" Rubber Bushing
44	O/L	-	5/16 NC x 5 1/2" Eye Bolt
46	2694	2	Spacer Hitch Pin - 1 5/16 O.D. x 1" I.D. x 15/16 long
47	O/L	-	3/4" NC Castle Nut
48	O/L	-	3/16 x 1 1/2" Cotter Pin
49	2707	1	Cone Plug - 1 3/8 O.D. P#195
50	O/L	-	1/4 Flat Washer
51	MF016	2	3/8 NC x 1" Hex Head Cap Screw
52	O/L	2	1/4 NC x 1 HHCS Full Thread
53	O/L	-	1/4 NC Hex Nut
54	MF004	1	5/16" x 1" Hex Cap Screw

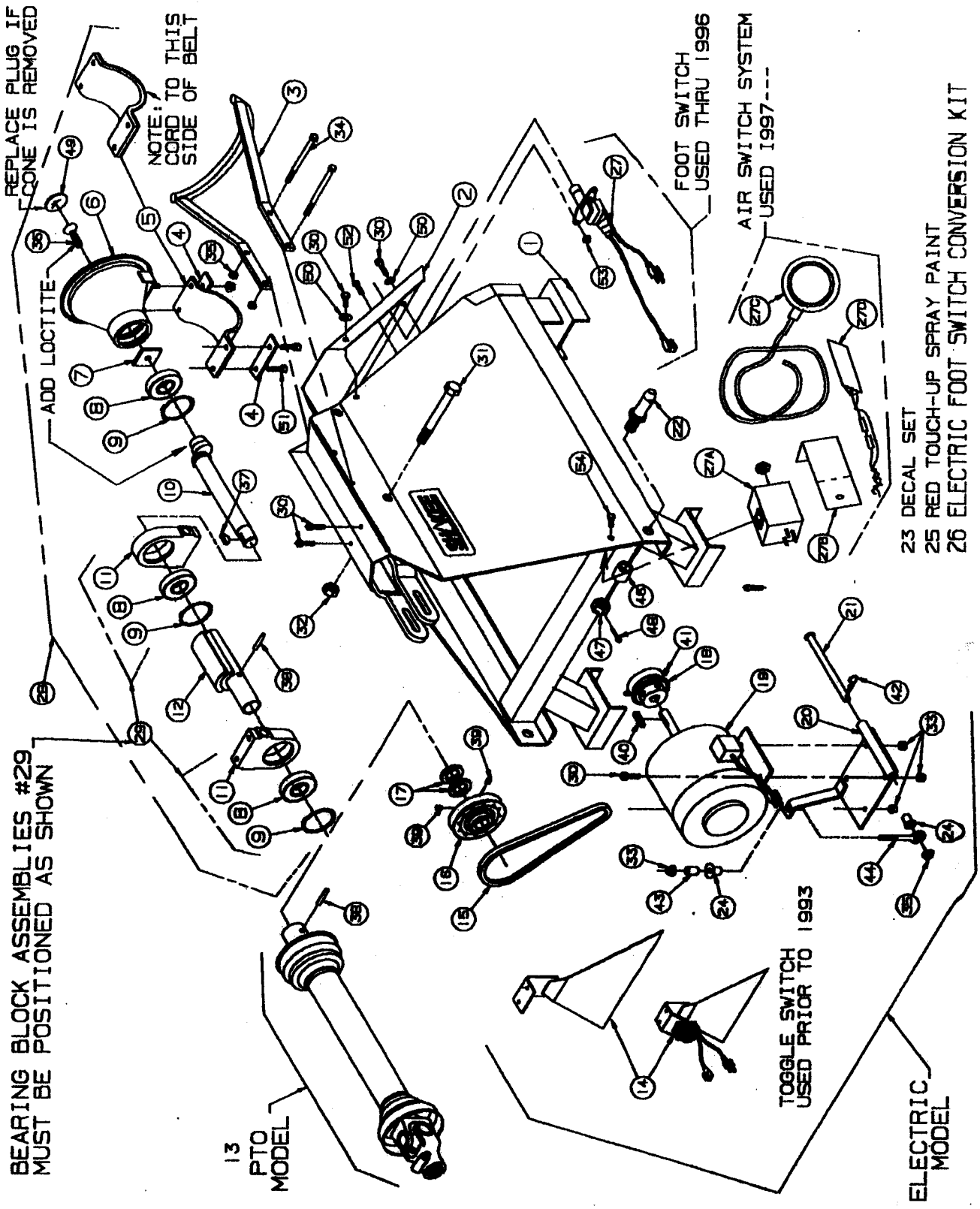
REPLACE PLUG IF CONE IS REMOVED
NOTE: CORD TO THIS SIDE OF BELT
ADD LOCTITE
FOOT SWITCH USED THRU 1996
AIR SWITCH SYSTEM USED 1997---
23 DECAL SET
25 RED TOUCH-UP SPRAY PAINT
26 ELECTRIC FOOT SWITCH CONVERSION KIT
BEARING BLOCK ASSEMBLIES #29 MUST BE POSITIONED AS SHOWN
13 PTO MODEL
TOGGLE SWITCH USED PRIOR TO 1993
ELECTRIC MODEL

PARTS LIST FOR HYDRAULIC SHAKERS

NO.	PART #	NO. REQUIRED	DESCRIPTION
1	O/L*	-	Set Screw - 5/16 NC X 5/16 Long
2	2661	1	5/8" Bore For 40 Series Motor With An "A" Flange
	or		
	2663	1	7/8" Bore For 50 Series Motor With A "B" Flange
3	2660	1	Insert Flex Coupling STD #3
4	2664	1	1 1/4" Bore Special Coupling
5	2679	3	Snap Ring - 3 1/8 O.D Waldes Truarc #N5000-281
6	2636	3	35MM I.D. Bearing
7	2678	2	Cast Housing
8	2633	1	Counter Balance
9	O/L*	1	1/4 x 7/8" Woodruff Key
10	2614	1	Shaft Assembly
11	2708	1	Retaining Washer
12	2712	1	Cone Assembly
13	MF010SHB	1	1/2 NC x 3/4" Socket Head Bolt
14	2682	1	Guard/Guide
15	O/L*	-	3/4 NC x 6" Hex Head Cap Screw Gr 5
16	O/L*	-	3/4 NC Lock Nut
17	2683	1	Hydraulic Tube Assembly
18	O/L*	-	7/16 NC x 1 1/4 Hex Head Cap Screw Gr 5
19	O/L*	-	7/16 NC Nut
20	O/L*	-	1/2 NC x 1 3/4 Hex Head Cap Sscrew Gr 5
21	O/L*	-	1/2 Washers
22	O/L*	-	1/2 NC Nut
23	**	-	.75in Displacement, 40 Series A Flange Motor
24	**	-	2.7in Displacement, 50 Series B Flange Motor
25	2695	1	Retaining Belt
26	2634	2	Belt/Clamp
27	O/L*	-	5/16" Flange Lock Nut
28	O/L*	-	3/8" x 1" Hex Head Cap Screw Gr 5
29	2707	1	Cone Plug - 1 3/8 O.D P195
30	2650A	1	Complete Drive with Cone
31	2648	2	Bearing & Block Asy
36	O/L*	2	3/8" X 1 3/4" Spirol Pin

CROSS MOTOR SEAL KITS

Series Number is on flange of the motor.

Series	Series Number	Seal Kit Cross Number
40	36XXXX	4P0017-102
50	300092	5P0017-004

*O/L - OBTAIN LOCALLY

** - Supplied By Customer, Call for information if necessary.

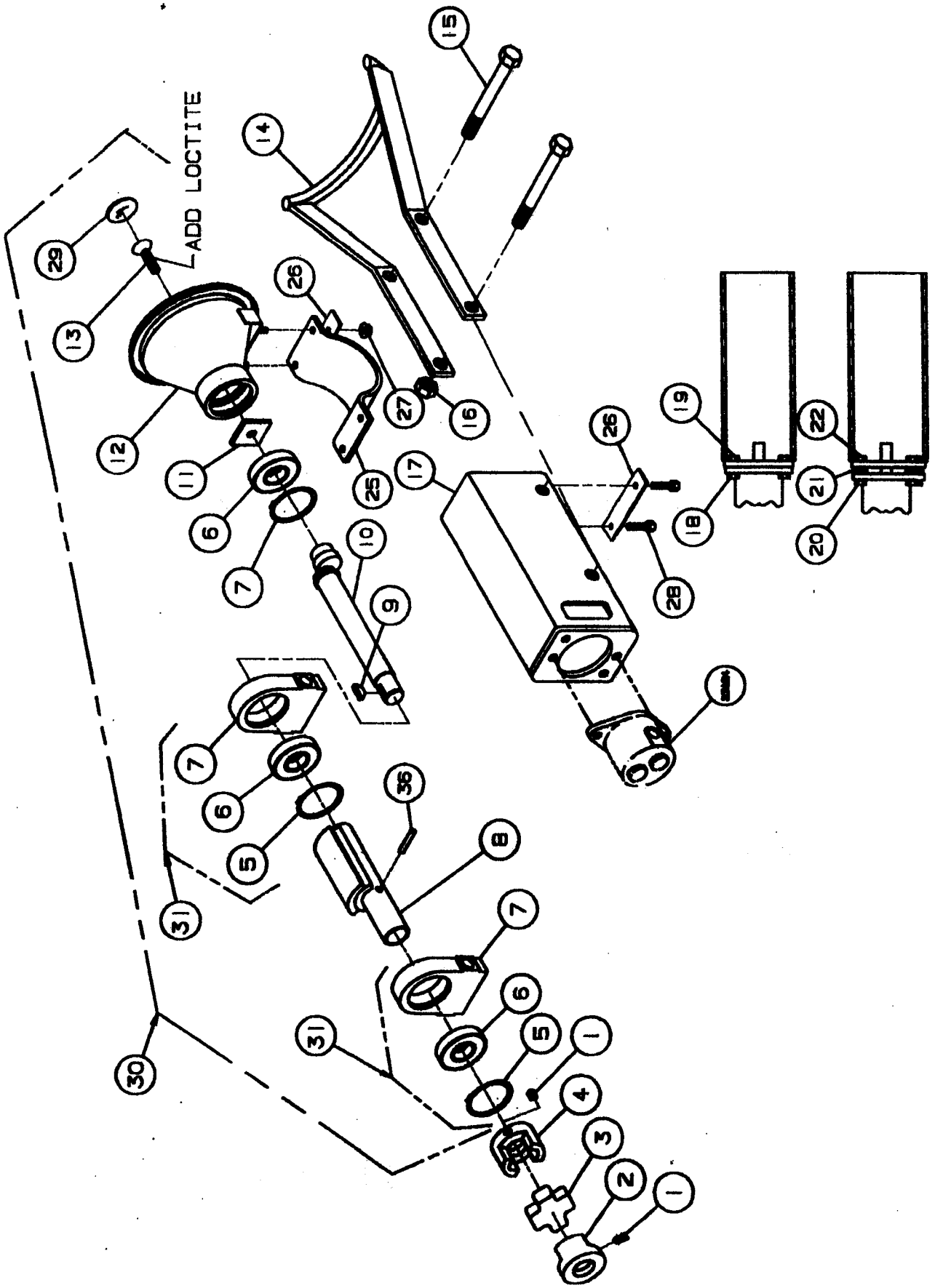
ADD LOCTITE
15
14
29
13
26
12
27
16
11
25
17
26
19
22
6
7
10
9
18
21
20
28
1
7
6
36
5
8
31
7
6
5
1
4
3
2
1
31
30

HYDRAULIC BALER MODIFICATIONS.

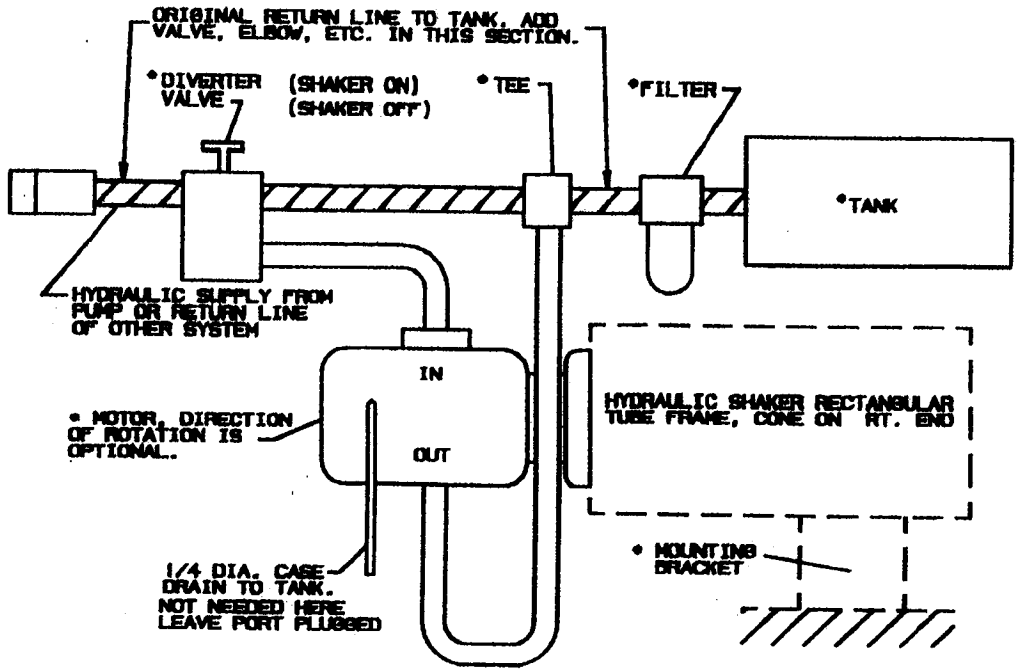

* SUPPLIED BY CUSTOMER

FOR TRACTOR HYDRAULICS

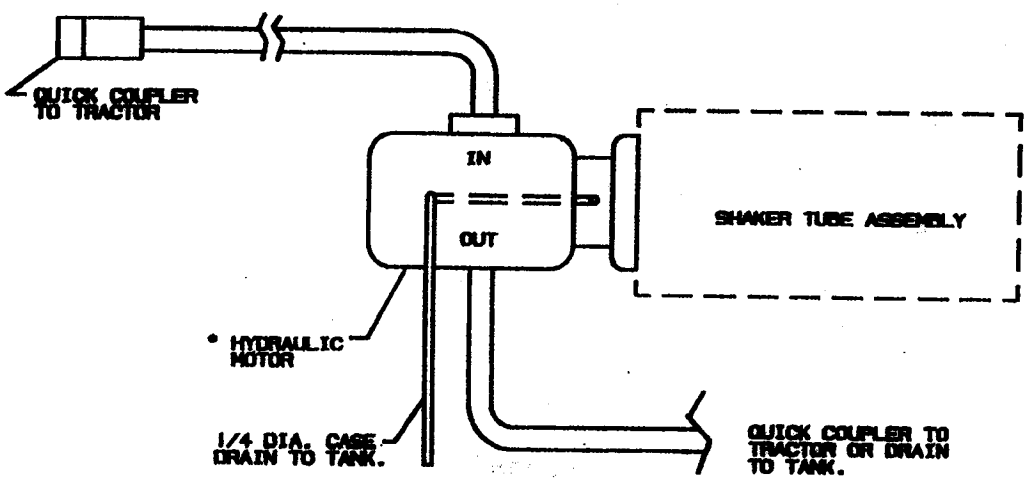

* SUPPLIED BY CUSTOMER

BE SURE DRAIN LINE IS OPEN & FREE OF EXCESSIVE BACK PRESSURE OR IT WILL BLOW OUT THE SHAFT SEAL.

PARTS LIST FOR PTO DRIVE SHAFT

NO.	PART #	NO. REQUIRED	DESCRIPTION
1	2640	1	6R PTO Drive Complete
2	2870	1	1-3/8 QD Yoke 6R
3	2871	2	6R Cross Repair Kit
4	2872	1	6R Yoke With 3/4 X 7/8 Bore Outer Shaft 21-3/4 Long
5	2873	1	6R Yoke With 3/4 X 7/8 Shaft 23-1/4 Long
6	2874	1	6R Yoke With 1-1/4 Bore
7	2875	2	Nylon Bearing and Ring Kit
8	2876	1	Inner Shield with Bearing and Retainer
9	2877	1	Outer Shield Bearing and Retainer
10	ST160	1	PTO Rotating Drive Decal
11	ST159	1	PTO Shield Missing Decal

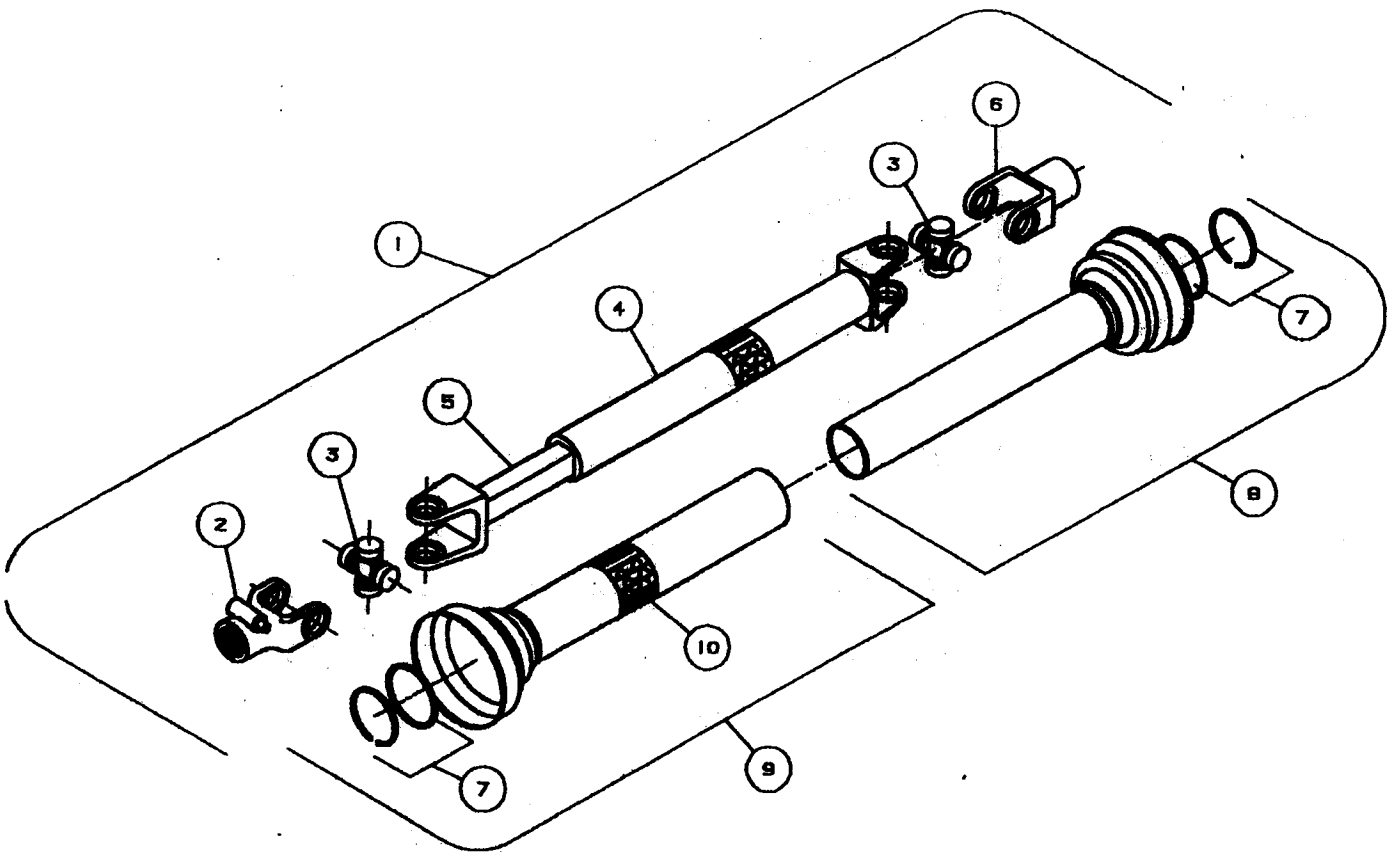

PROPER TORQUE FOR FASTENERS

The chart lists the correct tightening torque for fasteners used on Shakee Christmas Tree equipment. When bolts are to be tightened or replaced, refer to this chart to determine the grade of bolts and the proper torque except when specific torque values are assigned in manual text.

BOLT HEAD MARKINGS

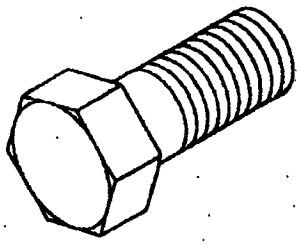

SAE Grade 2

(No dashes)

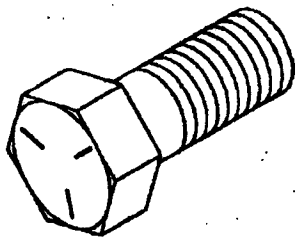

SAE Grade 5

(3 radial dashes)

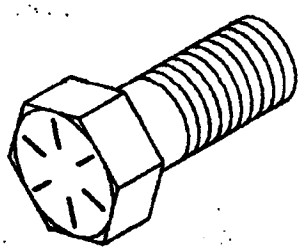

SAE Grade 8

(6 radial dashes)

RECOMMENDED TORQUE IN FOOT POUNDS [INCH-POUNDS] (NEWTON-METER)

BOLT DIAMETER IN	SAE GRADE 2	SAE GRADE 5	SAE GRADE 8
1/4	6 (72) [8]	11 (132) [151	14 (168) [19]
5/16	13 (156) [181	21 (252) [281	25 (300) [341
3/8	23 (276) [31]	38 (456) [52]	55 (660) [751
7/16	37 (444) [501	55 (660) [751	80 (960) [110]
1/2	57 (684) [771	85 (1020) [1151	120 (1440) [1651
9/16	82 (984) [1111	125 (1500) [1701	180 (2160) [2451
5/8	111 (1332) [150]	175 (2100) [2401	230 (2760) [3101
3/4	200 (2400) [270]	300 (3600) (410)	440 (5280) [600]
7/8	280 (3360) [380]	450 (5400) [6101	720 (8640) [975]
1	350 (4200) [475]	680 (8160) [9251	1035 (12420) [14001
1-1/8	450 (5400) [6101	885 (10620) [1200]	
1-1/4	600 (7200) [8151	1255 (15060) [1700 1	
1-3/8	675 (8100) [915]	1620 (19440) [2200]	
1-1/2	920 (11040) [12501	2200 (26400) [2990 1	

"WHEEL KIT" ASSEMBLY

RES Equipment
Shakee
PO Box 710
Mt. Angel, OR 97362

Phone: 503-634-2242
Fax: 503-634-2244

PARTS LIST FOR SHAKER WHEEL KIT
SH2850WK

NO.	PART #	NO. REQ.	DESCRIPTION
1	SH2810	1	Tongue Weldment - LT
2	SH2812	1	Tongue Weldment - RT
3	SH2820	1	Tongue Pull Bar Wldmt
4	SH2694	2	Hitch Spacer Sleeve
5	SH2827	1	Crank Arm Lever
6	SH2825	1	Axle Weldment
7	SH2824	2	Axle Sleeve
8	SH2845	2	4 x 8.00 Tire

*O/L - OBTAIN LOCALLY

NO.	PART #	NO. REQ.	DESCRIPTION
15	O/L*	2	3/8 NC X 1 HHCS GR5
16	O/L*	2	3/8 NC Flange Lock Nut
17	O/L*	1	1/2 NC x 3 1/2" HHCS GR5
18	O/L*	2	1/2 NC X 5 1/2" Carriage Bolt
19	O/L*	4	1/2 Flatwasher
20	O/L*	3	1/2 NC Flange Lock Nut
21	O/L*	1	5/8 NC x 1 3/4 Carriage Bolt
22	O/L*	1	5/8 NC Hex Jam Nut
23	O/L*	2	5/8 Flange Lock Nut
24	O/L*	1	5/8" Flatwasher

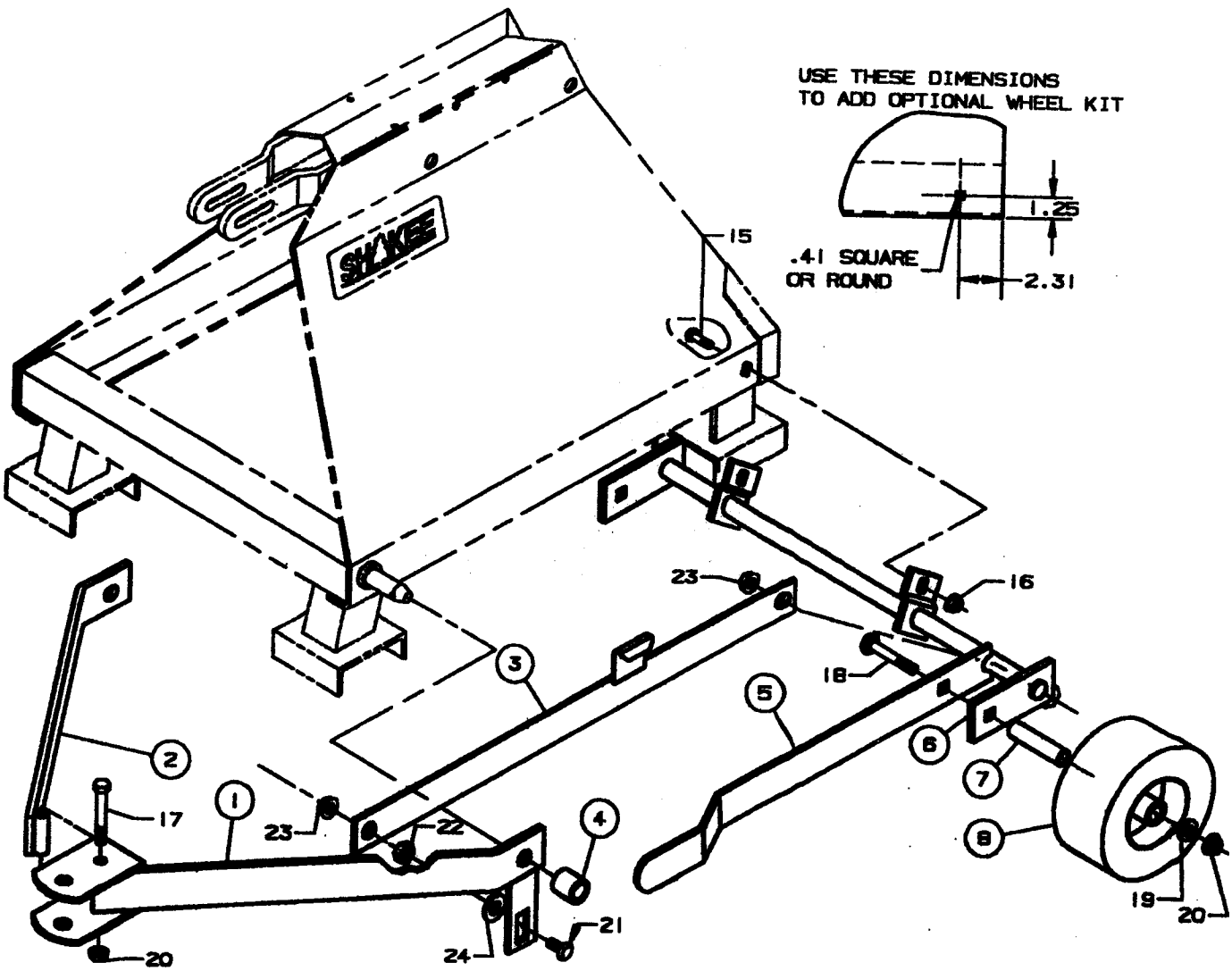

WHEEL KIT ASSEMBLY

Assembly:

Sub-assemble the lift handle and the wheels to the axle first as follows. Position the crank arm lever with the offset handle portion away from the shaker on the left side of the shaker, inside of the axle mount bar (looking into the cone) and with the notch in the end of the handle over the axle shaft. Then insert the long 1/2" carriage bolt through the handle and then through the axle mount bar and then through the wheel with the 1/2" ID x 3/4" OD X 4 1/8" long sleeve positioned inside the wheel. Then add a flat washer and lock nut and tighten securely. On the right side install the right wheel similarly but with no handle. The axle is now ready to be installed onto the shaker.

If there is not a hole in the frame on each side near the rear (cone end) lower corner this will have to be drilled. See dimensions shown on the parts drawings. Remove the front cover from the shaker. Position the axle arm assembly up against the bottom and rearward against the rear legs of the shaker with one angle clip on each outside. Insert the 3/8" x 1" cap screw from the inside of the frame out through the slot in the clip and install the self locking nuts loosely on each side. With the axle pulled up tight in this position tighten both 3/8" bolts to lock the axle in place. It may be necessary to extend a hole slightly to get the axle in the proper position.

Attach the tongue to the front of the shaker over the three point lift pins by swinging the two arms apart and sliding them over the pins, with the welded lug on the left side and hanging down. Follow this with a pipe spacer slipped over each lift pin and then a retaining pin or bolt through the end of the lift pin. Tighten the pivot bolt that holds the two tongue halves together.

Install the tongue pull bar on the left side inside of the axle assembly. Slip the rear end over the bolt which is welded to the axle assembly and which has a jam nut already installed and follow by a self locking nut. Draw up just snug but leaving the arm room to move. This should be positioned with the handle lock clip upward and the arm extending forward to the tongue lug. Position the 5/8" carriage bolt into the tongue lug in the slot followed by a jam nut but leave only snug and with the bolt pointing inward. Slip the pull bar over this bolt and add a 5/8" lock nut. This bolt may be slid up or down in the slot depending on the height of the draw bar in the tractor to control the travel of the front end of the tongue.

With the control handle pushed down and locked the shaker should set approximately level, resting on the tires at the back with the tongue resting on the tractor draw bar on the front. When the handle is raised to lower the shaker the wheels should come up even with the feet and the front of the shaker should come down so none of it's weight is on the tractor. When this is properly positioned tighten the jam nut very tight on the lug. Then tighten the retaining lock nut just snug so that the arm is free to pivot.

Reinstall the rear cover of the shaker.

PARTS LIST FOR SHAKER TREE HOLDER SH2855TH

NO.	PART #	NO. REQ.	DESCRIPTION
1	SH2861	1	Tube Holder Weldment Assembly
2	SH2858	2	Support Bar
3	SH2859	2	Support Straps - 10"
4	SH2862	1	Tree Hook
10	O/L*		1/2 NC X 2 1/2" HHCS
11	O/L*		1/2 NC Locknut
12	O/L*		5/8 NC X 3 1/2" HHCS
13	O/L*		5/8" Flatwasher
14	O/L*		5/8 NC Locknut

*O/L - OBTAIN LOCALLY

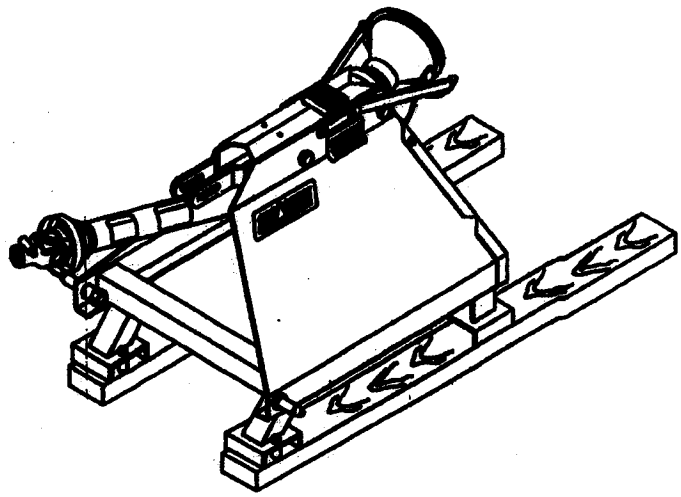

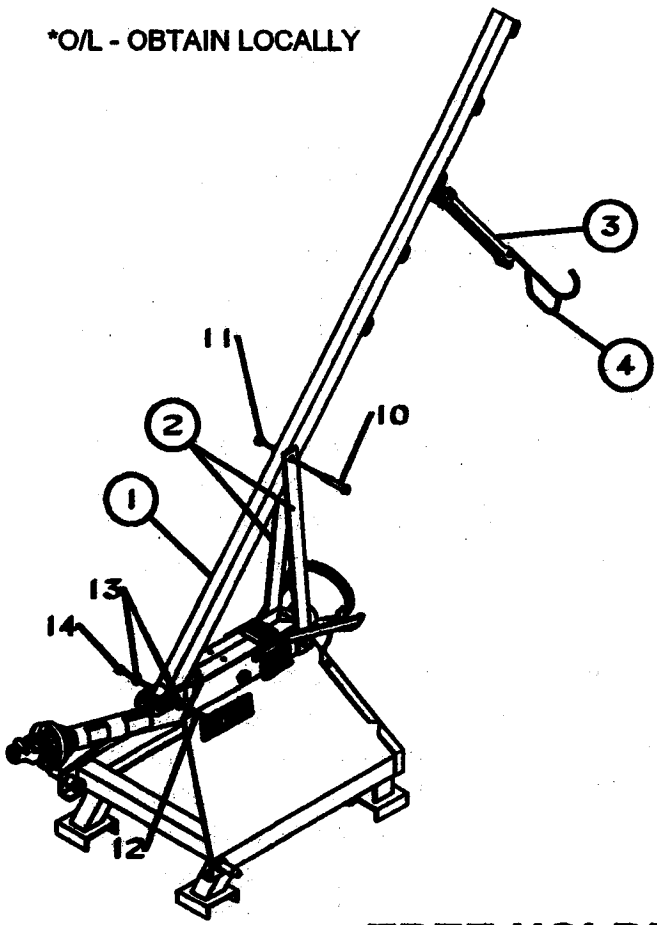

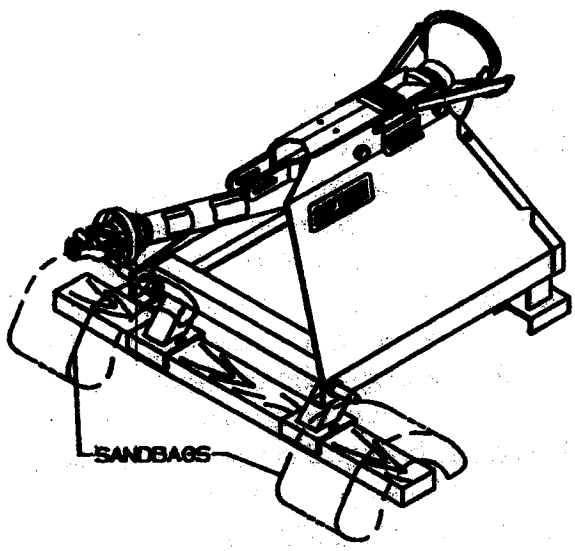

TREE HOLDER ASSEMBLY

OPERATING INSTRUCTIONS

Be sure all bolts are tightened securely.

NOTE: The principal of operation is for the rubber support straps to be pulling the tree into the cone at an angle steep enough so that the tree stays in the cone as it is being shook. If it bounces around in the cone then the rubber support straps are not pulling it towards the cone

The rubber support straps may be hooked to two different eyelets to give an angular pull.

⚠ CAUTION

Be sure that the hook and all parts are properly attached. Do not allow children to hang from or play with this unit. It like any piece of machinery can be dangerous if misused or abused.

The shaker may be left on or turned off when the tree is removed. The new tree then may be laid on the guard guide then lifted and hooked before starting the shaker or may be done while the shaker is running.

Lift the tree up to be approximately in line with the cone, pull down on the rubber support strap and hook, pulling it out towards the end of the tree and hook under the main stem of the tree between the branches.

NOTE: If the cord is hooked in too far towards the butt, excessive shaking and possible damage will occur at the tip end. If hooked too far out it could break the tip or get very little action at the outer end. This will have to be determined on each type and size of tree by experience.

When unhooking, pull the hook down and out of the tree and release the tension gradually then lower the tree and remove from the shaker.

⚠ WARNING

Be careful when releasing the hook and rubber support strap that it is not allowed to release with considerable tension as the hook could hit someone and cause injury.

SHAKING EFFECTIVENESS

If your trees are very difficult to remove needles etc., pushing the tree to one side or lifting it above being directly in line with the cone will cause an additional "kicking action" due to this misalignment and will improve the shaking ability.

If the tree is "flopping around" in the cone, then the angle of the rubber support straps pulling it into the cone is not steep enough, thus not creating enough holding force against the cone. Move one or both rubber support straps one eyelet closer to the shaker.

STABILITY

For large heavy trees it may be necessary to tie the shaker down. There are numerous ways to do this as shown in the illustrations on the parts list page.

1. If a tractor is being used it is a good idea to fasten it to the 3-point hitch of the tractor and tighten the top link adequately to hold pressure against the top, this will prevent tipping.
2. It may be fastened to a pallet, framework or floor.
3. A 2 x 4 may be inserted across the back end of the shaker and bolted through the holes provided in the feet, using either carriage bolts inserted up from the bottom or lag bolts inserted down from the top. Then sandbags etc. may be added to this board for counterbalance. (See illustration #2 on parts list page.)
4. Longer longitudinal 2 x 4's may be used and bolted at the back end from under the feet. At the front or cone end, a spacer block will have to be installed in the feet above the brace board and a bolt inserted through both to hold in place. This board may extend anywhere from 1' to 3' out past the cone. (See illustration #1 on parts list page.)

⚠ CAUTION

Be sure when shaking heavy trees that one of the following provisions is used to prevent the shaker from tipping forward.

ASSEMBLY INSTRUCTIONS

Unpackage the parts and be sure all are present. See parts list.

Remove the large 3/4" bolt from the front (cone end) bearing mount of the shaker assembly. Slide the large hole end of one upright bar under the head of the bolt, reinsert the bolt through the frame and bearing of the shaker, add an additional upright bar and the nut. Leave loose.

Position the tree holder tube with the cross tube between the two lift lugs on the back end of the shaker and insert a 5/8NC X 3 1/2" bolt. With a washer under the head, through the slot in the lift bracket, then through the square tube attached to the back end of the lift bar, then through the other side. Add a washer and nut.

Position the upright braces on either side of the lift bar. Be sure the lift bar has the eyelets on the bottom, and insert a 1/2NC x 2 1/2" bolt through one of the upright braces, then through the lift bar tube, through the other brace, and add washer and nut.

NOTE: The upright bars do not have an offset in them but will conform to the shape of the mating part, when tightened properly. Do not try to bend them to fit.

Torque the 3/4" bolt on the cone bearing support to 300' lbs. Slide the cross bolt in the lift clevices toward the cone end of the the slot and tighten to 150' lbs. torque. Tighten the cross bolt through the lift bar to 90' lbs.

NOTE: These bolts must be tight and kept tight or vibration will cause working and damage.

The two rubber support straps slip over the small loop end of the tree hook. The wire hooks on the other end will be hooked to the rings in the bottom of the tree holder as needed to best fit your trees.